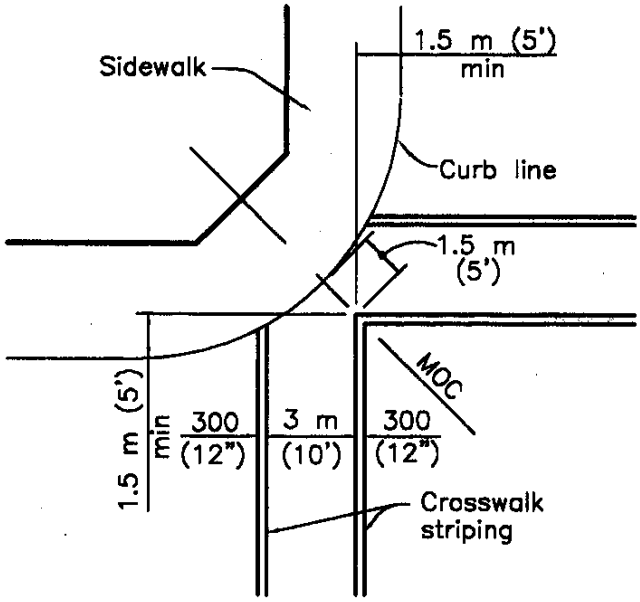

CASE I

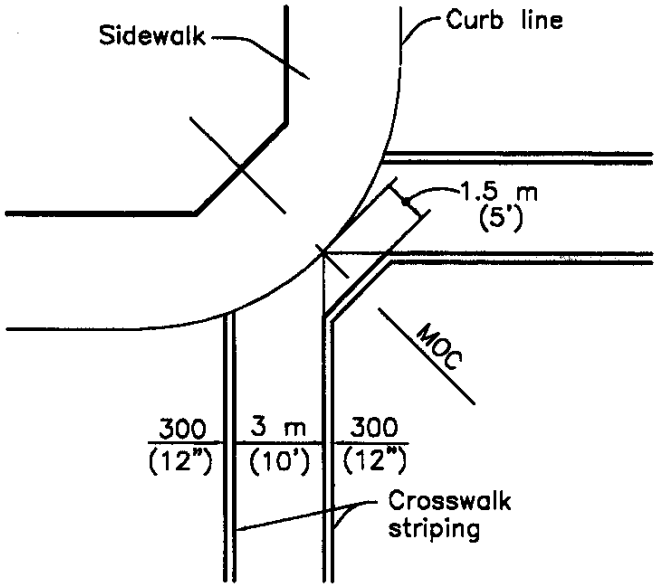

CASE II

NOTES:

1. All crosswalks shall be white unless noted on the project plans.
2. Case II shall be used only if the 1.5 m (5') minimum dimension for Case I cannot be maintained.
3. Case I shall be used with 90° delta and 7.5 m (25') or greater curb return radius.

Dimensions are in millimeters, except as noted.

REVISIONS		CITY OF LONG BEACH, CALIFORNIA DEPARTMENT OF PUBLIC WORKS	STANDARD PLAN NO.
NO.	DATE		
1	04/11/96	CROSSWALK DETAILS	METRIC 307
2	12/01/97		
3	12/23/02	APPROVED BY: [signature] DATE: 1/10/03 CITY ENGINEER R.E. No. 40599 EX. DATE 03/31/03	SHEET 1 OF 1
4			

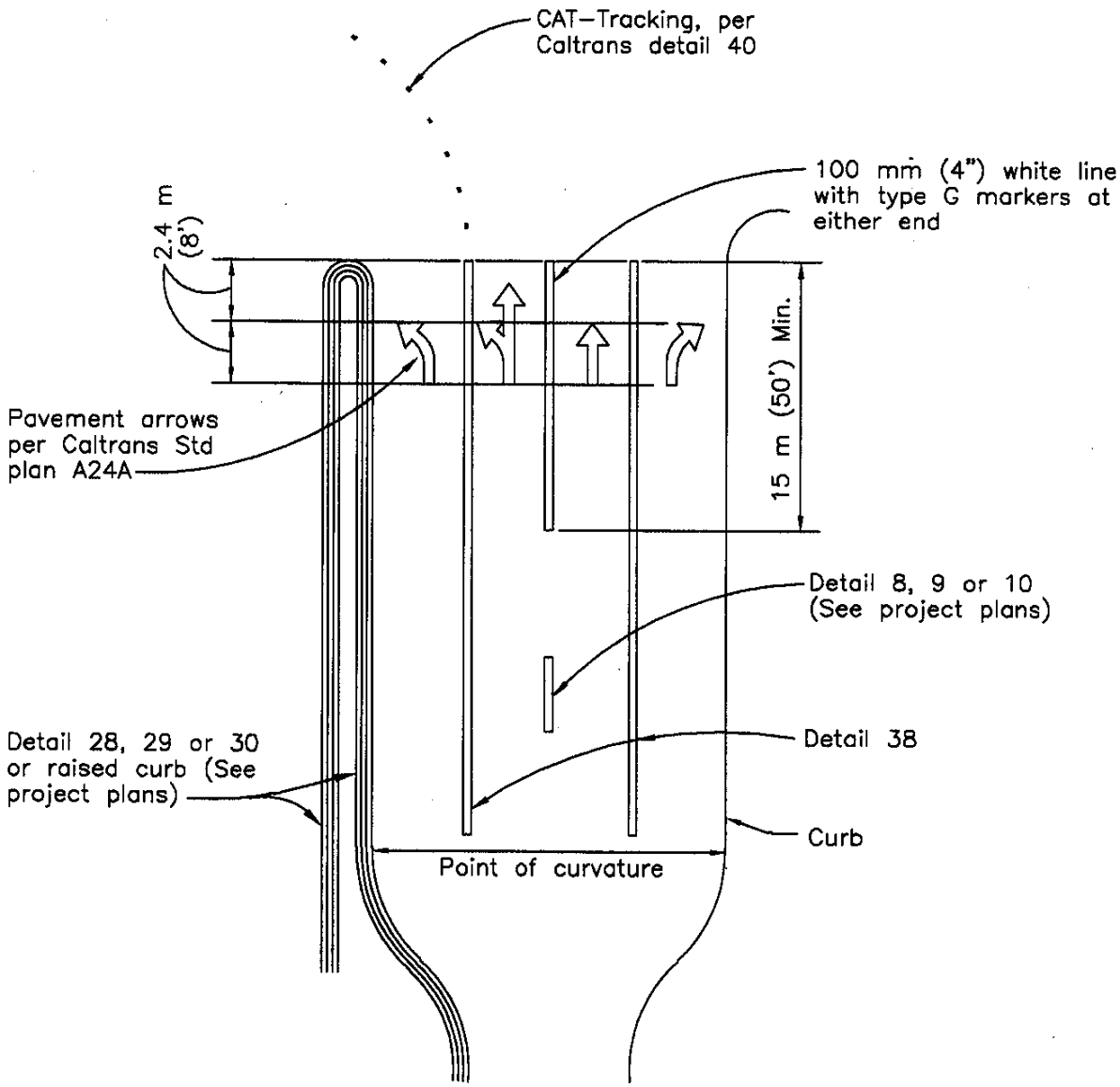

NOTES:

1. Arrows shall be installed at the end of all left turn and right turn pockets.
2. Arrows shall be installed at the beginning and end of left or right turn pockets 30 m (100') or greater in length.

Dimensions are in millimeters, except as noted

REVISIONS		CITY OF LONG BEACH, CALIFORNIA DEPARTMENT OF PUBLIC WORKS	STANDARD PLAN NO.
NO.	DATE		
1	07/10/02	TRAFFIC STRIPING AND ARROW MARKINGS FOR TURN POCKETS, OPTIONAL TURN LANES AND THROUGH LANES	METRIC 308
2	12/23/02		
3	02/28/03	APPROVED BY: [signature] DATE: 4/16/03 CITY ENGINEER R.E. No. 40399 EX. DATE 03/31/07	SHEET 1 OF 1
4			

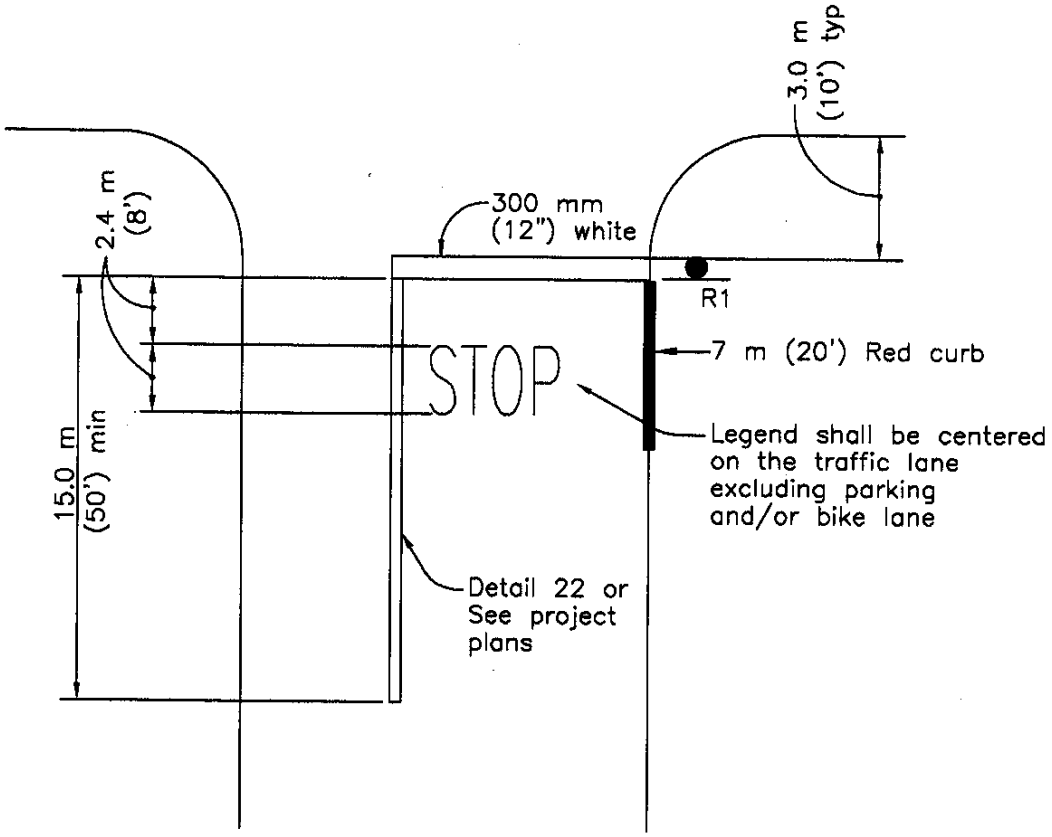

STOP AND STOP BAR

Dimensions are in millimeters, except as noted

REVISIONS		CITY OF LONG BEACH, CALIFORNIA DEPARTMENT OF PUBLIC WORKS	STANDARD PLAN NO.
NO.	DATE		
1	07/10/02	STOP AND STOP BAR MARKINGS	METRIC 309
2	12/23/02		
3	02/28/03	APPROVED BY: [signature] DATE: 4/16/03	SHEET
4		CITY ENGINEER R.E. NO. 40599 EX. DATE 03/31/07	1 OF 1

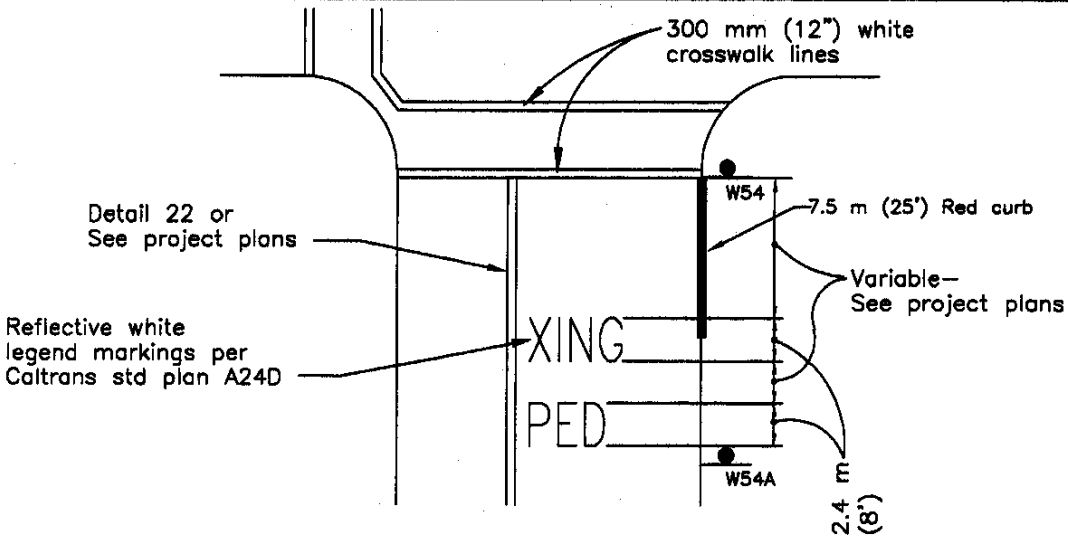

PEDESTRIAN MARKING AT CROSSWALK

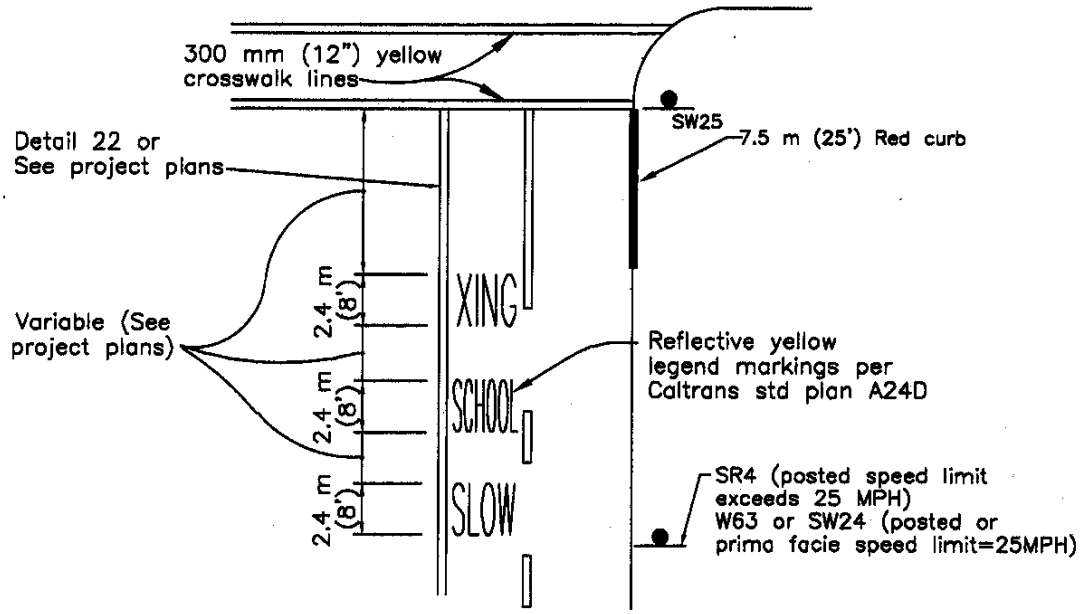

PEDESTRIAN MARKING AT SCHOOL CROSSWALK

NOTES:

1. Legend shall be installed in each traffic lane approaching a school or pedestrian crossing unless project plans show only a single set of legend markings centered between two adjacent lanes or a double set of legend markings installed in one exceptionally wide lane.
2. Legend shall be centered on the traffic lane excluding parking and/or bike lane.
3. Minimum red curb on approach crosswalk shall be 7.5 m (25'), with 4.5 m (15') on departure legs.
4. All school and pedestrian warning signs (W54, W54A, W63, SW24, SW25 and SR4) shall be 3M high–visibility fluorescent yellow–green.

Dimensions are in millimeters, except as noted

REVISIONS NO.	DATE	CITY OF LONG BEACH, CALIFORNIA DEPARTMENT OF PUBLIC WORKS	STANDARD PLAN NO.
1	07/10/02	PAVEMENT MARKINGS AT SCHOOL AND PEDESTRIAN CROSSINGS	METRIC 310
2	12/23/02		
3	02/28/03	APPROVED BY: [signature] DATE: 4/16/03 CITY ENGINEER R.E. No. 40599 EX. DATE 03/31/07	SHEET 1 OF 1
4			

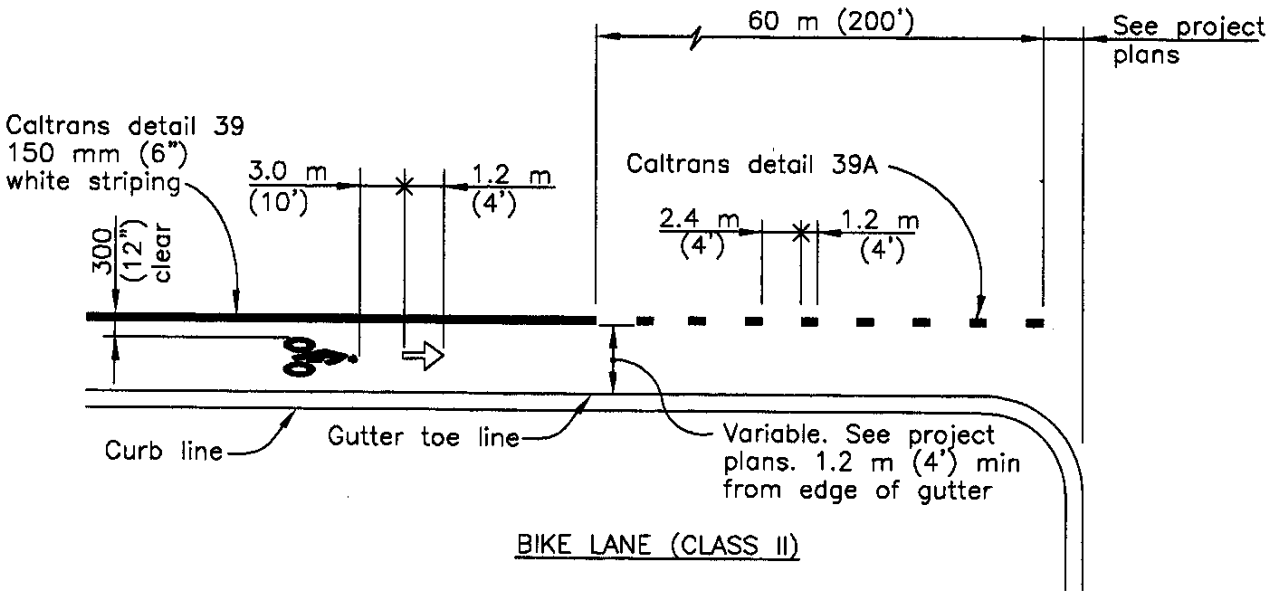

BIKE LANE (CLASS II)

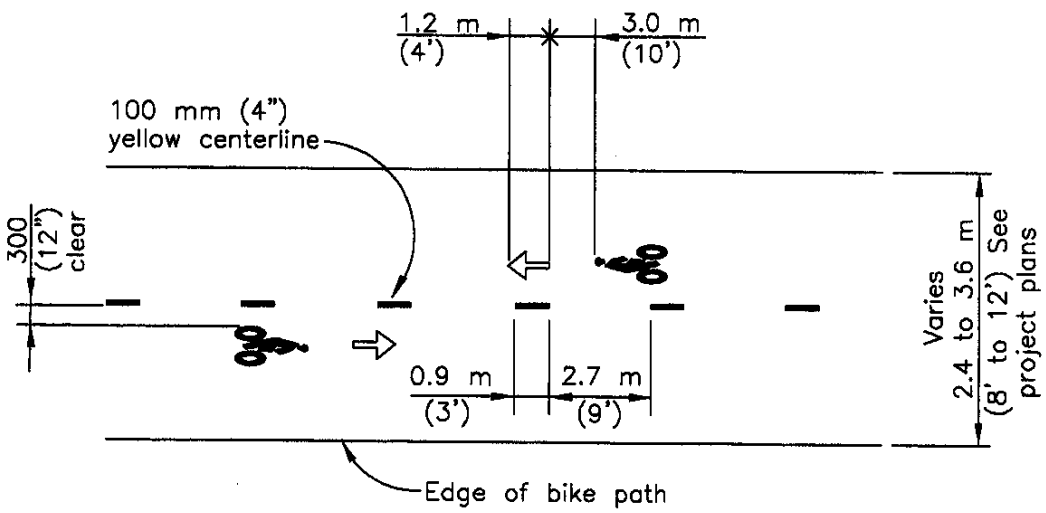

TWO-WAY BIKE PATH (CLASS I)

NOTE:

All bicycle striping and markings shall be white reflective paint except as noted for two-way bike path.

Dimensions are in millimeters, except as noted

REVISIONS		CITY OF LONG BEACH, CALIFORNIA DEPARTMENT OF PUBLIC WORKS	STANDARD PLAN NO.
NO.	DATE		
1	07/10/02	BICYCLE STRIPING AND MARKINGS	METRIC 311
2	12/23/02		
3	02/28/03	APPROVED BY: [signature] DATE: 4/16/03 CITY ENGINEER R.E. No. 40599 EX. DATE 03/31/07	SHEET 1 OF 1
4			

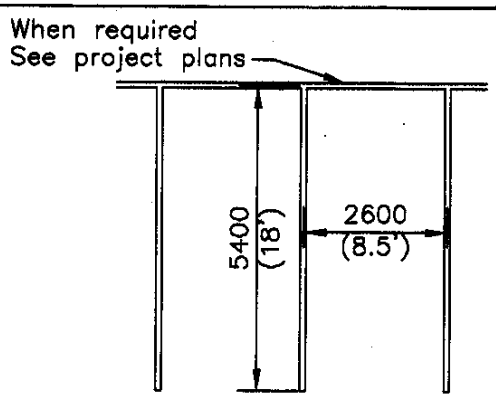

STANDARD SPACE DETAIL

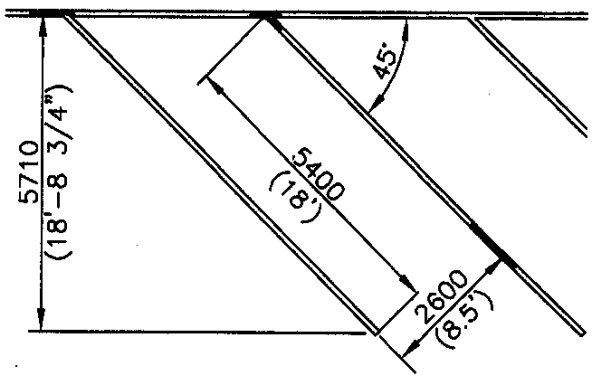

45° DIAGONAL SPACE DETAIL

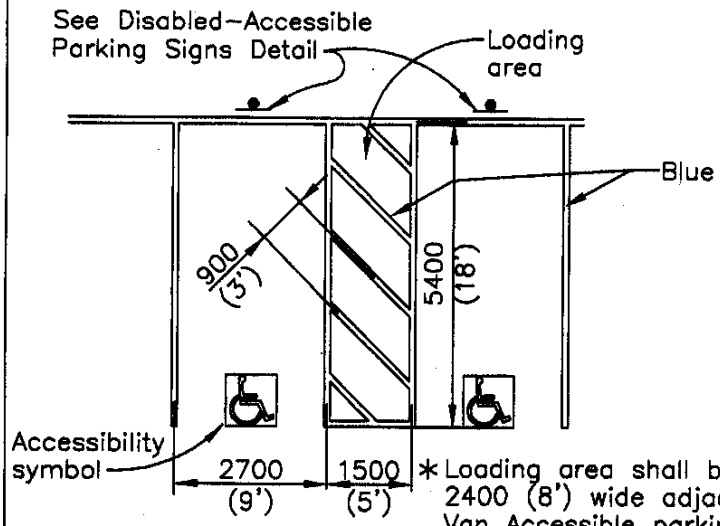

* Loading area shall be 2400 (8') wide adjacent to Van Accessible parking spaces (See project plans)

ACCESSIBLE SPACE DETAIL

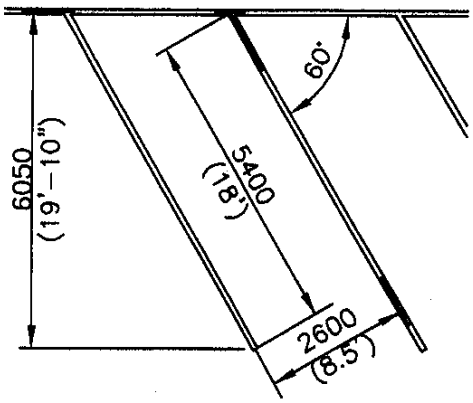

60° DIAGONAL SPACE DETAIL

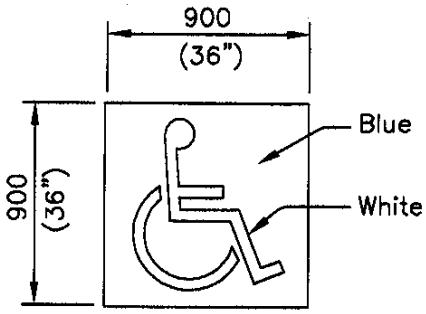

ACCESSIBILITY SYMBOL

NOTES:

1. Striping shall be 100 mm (4") wide white non-reflectorized paint, except as shown. Pavement markings shall also be non-reflectorized paint.
2. Signs shall conform to Section 56, Signs, of the State Standard Specifications, and the State Specifications for Aluminum Single Sheet Panel Signs.
3. Refer to Planning and Building Dept. requirements for permitted usage of compact and accessible parking spaces and lot layout.
4. Refer to Section 21.41.243 of the Long Beach Municipal Code for parking aisle width requirements.

Dimensions are in millimeters, except as noted

REVISIONS		CITY OF LONG BEACH, CALIFORNIA DEPARTMENT OF PUBLIC WORKS	STANDARD PLAN NO.
NO.	DATE		
1	07/09/02	PARKING LOT STRIPING, MARKING AND SIGNING	METRIC 312
2	12/23/02		
3	02/28/03	APPROVED BY: [signature] DATE: 4/16/03 CITY ENGINEER R.E. No. 40599 EX. DATE 03/31/07	SHEET 1 OF 2
4			

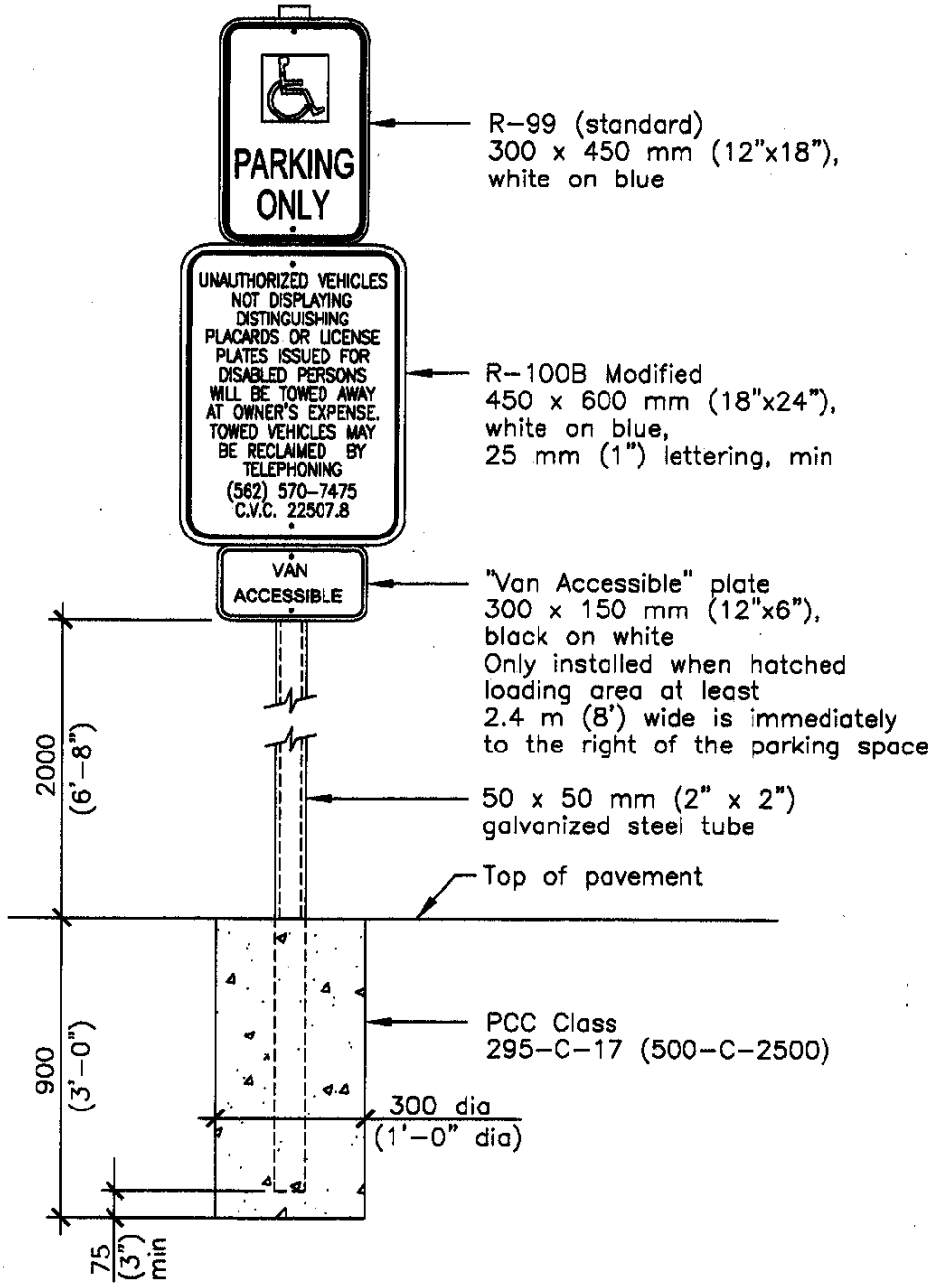

DISABLED-ACCESSIBLE PARKING SIGNS

Note: Not for street use

Dimensions are in millimeters, except as noted

REVISIONS		CITY OF LONG BEACH, CALIFORNIA DEPARTMENT OF PUBLIC WORKS	STANDARD PLAN NO.
NO.	DATE		
1	07/08/02	PARKING LOT STRIPING, MARKING AND SIGNING	METRIC 312
2	12/23/02		
3	02/07/03	APPROVED BY: [signature] DATE: 4/16/03 CITY ENGINEER R.C.E. No. 40599 EX. DATE 03/31/07	SHEET 2 OF 2
4			

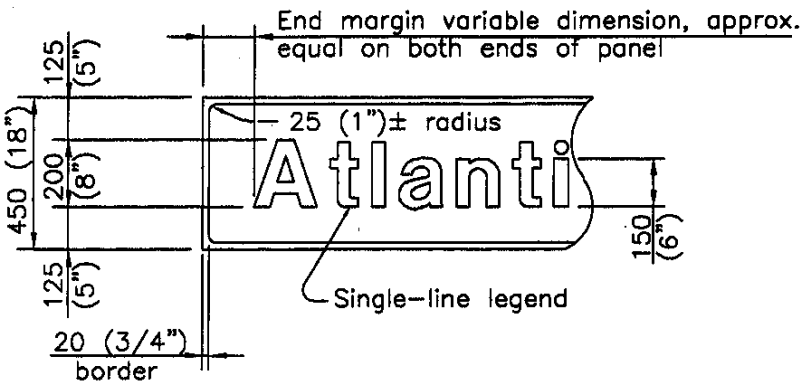

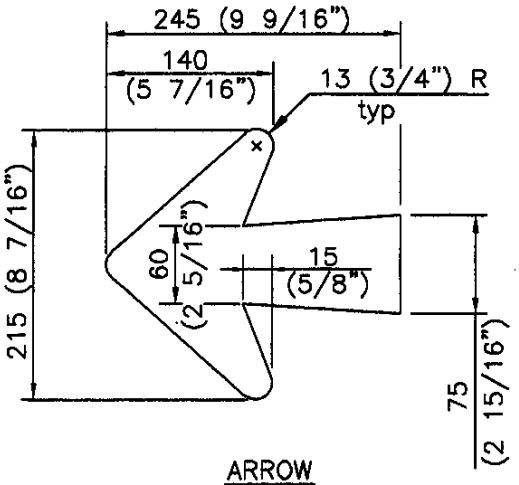

ARROW

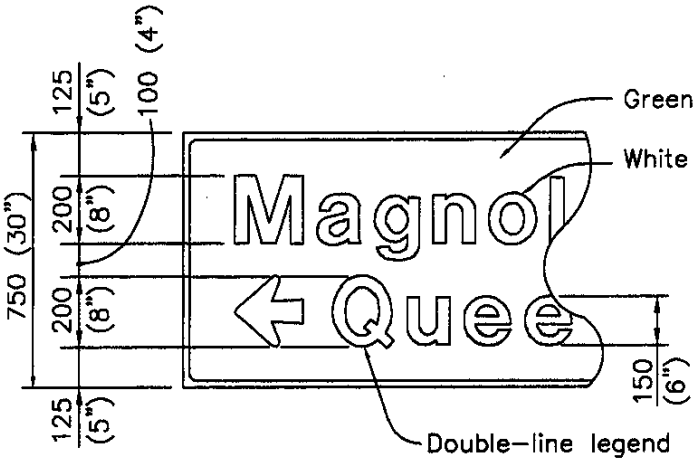

SIGN PANEL

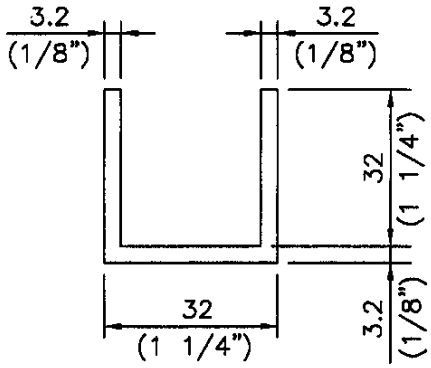

FRAME SECTION

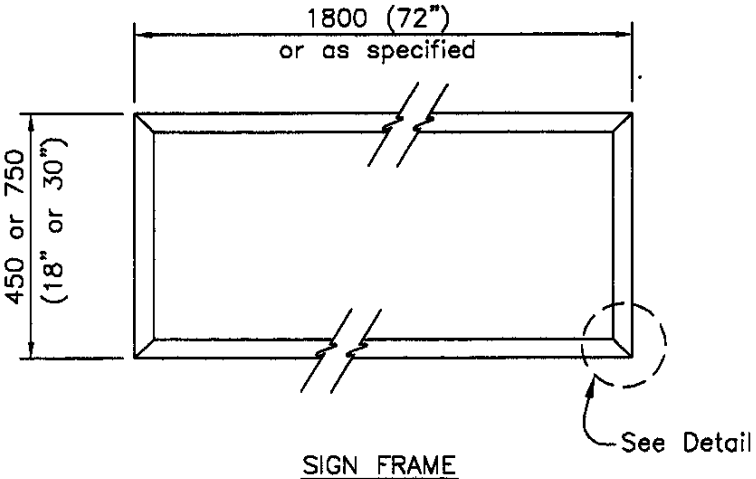

SIGN FRAME

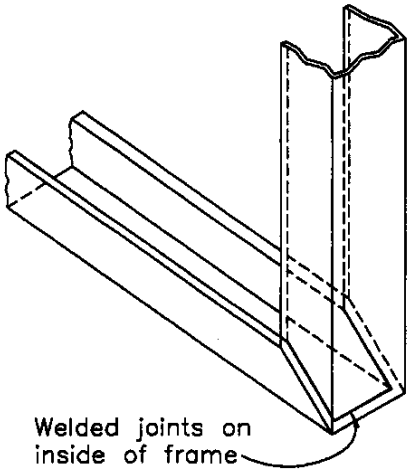

FRAME CORNER

Dimensions are in millimeters, except as noted

REVISIONS		CITY OF LONG BEACH, CALIFORNIA DEPARTMENT OF PUBLIC WORKS	STANDARD PLAN NO.
NO.	DATE		
1	12/02/97	MAST ARM DOUBLE-FACE REFLECTIVE STREET NAME SIGN	METRIC 313
2	12/23/02		
3		APPROVED BY: [signature] DATE: 4/16/03 CITY ENGINEER R.E. No. 40599 EX. DATE 03/31/07	SHEET 1 OF 3
4			

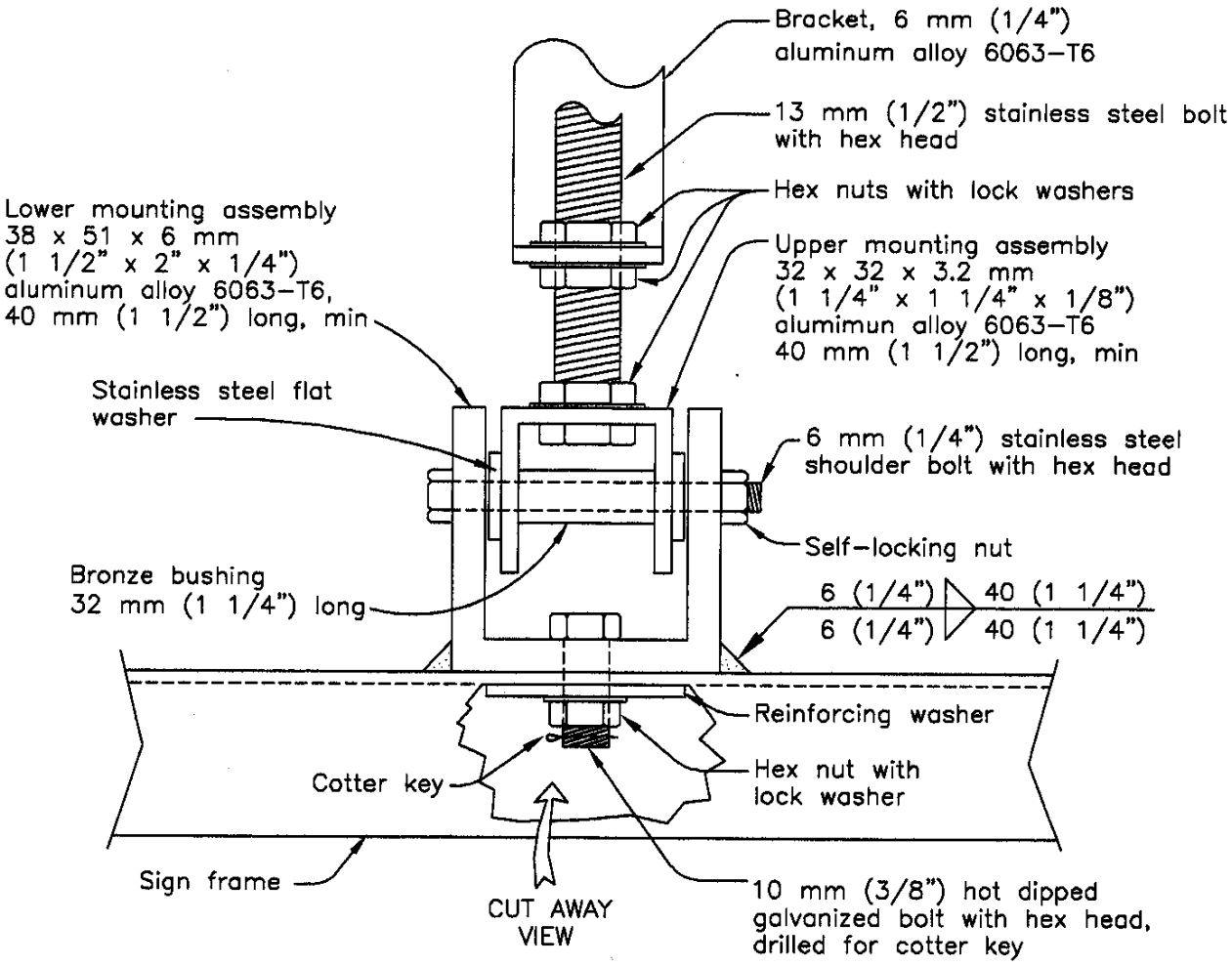

MOUNTING ASSEMBLY (Front View)

(Alternate to Caltrans Standard for Internally Illuminated Street Name Sign)

Dimensions are in millimeters, except as noted

REVISIONS		CITY OF LONG BEACH, CALIFORNIA DEPARTMENT OF PUBLIC WORKS	STANDARD PLAN NO.
NO.	DATE		
1	12/02/97	MAST ARM DOUBLE–FACE REFLECTIVE STREET NAME SIGN	METRIC 313
2	12/23/02		
3		APPROVED BY: [signature] DATE: 4/16/03	SHEET
4		CITY ENGINEER R.E. No. 40599 EX. DATE 03/31/07	2 OF 3

NOTES:

1. FABRICATION – PANELS Sign faces shall be panels of 1.3 mm (0.050") aluminum. Panel dimensions shall be 450 mm (18") in height by 1800 mm (72") in width unless otherwise specified.
   Affixed to one side of each panel shall be white (silver) high–intensity reflective sheeting meeting criteria for encapsulated lens sheeting specified in State of California "Specifications for Reflective Sheeting Aluminum Sign". Upon each panel shall be screened a green background. The resulting panel shall thus have a white legend and white border on a field of green. The green color shall be the standard color used for California highway guide signs.
   Legend shall be standard 200 mm (8") upper–case/150 mm (6") lower–case alphabet, 200 mm (8") numerals, arrows per detail and 20 mm (3/4") border. Legend shall be spaced on the panel in a balanced pattern.
2. FABRICATION – SIGN FRAME A closed rectangular frame shall be fabricated using 6063–T6 aluminum channels 32 x 32 x 3.2 mm (1 1/4" x 1 1/4" x 1/8"). Corners of the rectangular frame shall be mitered and welded along all three joined faces to assure structure soundness and maximize watertightness. Welds shall be on the inside of the frame. The lower mounting assembly shall be affixed to the top face of the frame prior to final fabrication of the sign.
3. FINAL FABRICATION Sign panels shall be riveted to the frame with anodized aluminum rivets. Rivet spacings shall not exceed 200 mm (8") on center. Rivet color shall be white or silver to approximate color of the sign panel border into which they are set.
   Sign panels with identical legends shall be affixed to both sides of a single frame, except where otherwise specified.
4. MOUNTING ASSEMBLIES Sign fixtures shall be suspended from mast arm by use of brackets which adjust vertically for leveling. Different rates of slope and degrees of curvature of the mast arm equipment requires this flexibility be incorporated into the assemblies.
   The adjustable bracket assembly shall provide for controlled movement by use of a bronze bushing so that the sign fixture will swing freely, thus minimizing transmission of wind loads to the mast arm and pole.
   Mounting assemblies shall be constructed and attached to the sign and mast arm in accordance with State Standard Plans, Plan ES–7A thru ES–7H, with the following exceptions:
   (a) The lower mounting assembly may be attached to the sign frame by use of a single mounting bolt rather than two as indicated in the Standard Plan, provided that, in addition to the above–referenced single mounting bolt, a fillet weld shall be run along both edges of the lower mounting assembly for the length of the join between said assembly and the top face of the sign frame.
   (b) The upper mounting assembly may be of a dimension that permits its nesting inside the lower mounting assembly, rather than the reverse as shown in the State Standard Plan.
   (c) Both the upper and lower mounting assemblies shall be constructed of aluminum bar stock.
   Location of the mounting assemblies on the sign shall be in accordance with State Standard Plans ES–7A thru ES–7H. 1500 mm (60") signs shall be mounted the same as 1800 mm (72") signs.
5. MOUNTING LOCATION Location of sign on mast shall be per State Standard Plans ES–7A thru ES–7H. 1500 mm (60") signs shall be mounted same as 1800 mm (72") signs.

Dimensions are in millimeters, except as noted

REVISIONS		CITY OF LONG BEACH, CALIFORNIA DEPARTMENT OF PUBLIC WORKS	STANDARD PLAN NO.
NO.	DATE		
1	12/02/97	MAST ARM DOUBLE–FACE REFLECTIVE STREET NAME SIGN	METRIC 313
2	12/23/02		
3	02/28/03	APPROVED BY: [signature] DATE: 4/16/03 CITY ENGINEER R.E. No. 40599 EX. DATE 03/31/07	SHEET 3 OF 3
4			

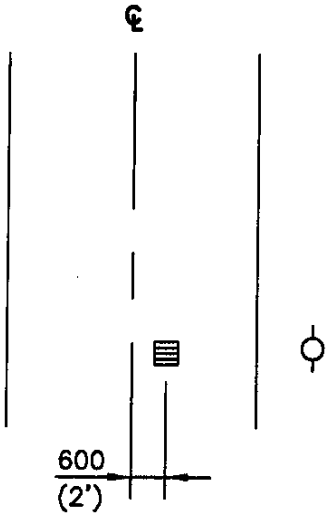

STREETS WITHOUT LANE STRIPING

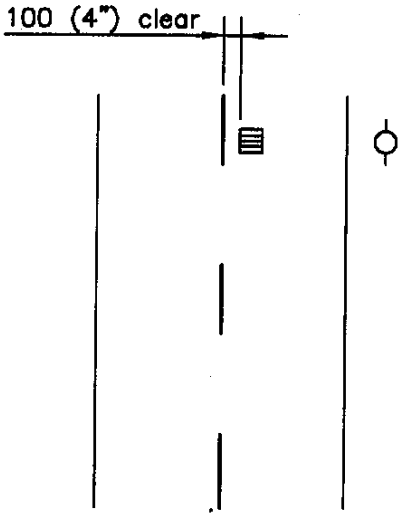

STREETS WITH CENTER LINE OR SINGLE LANE STRIPING

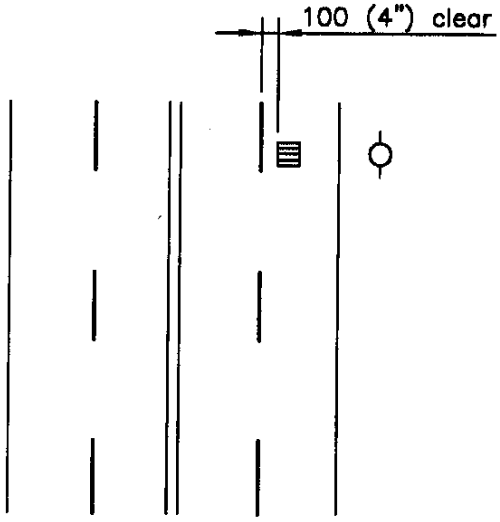

STREETS WITH MULTIPLE LANE STRIPING

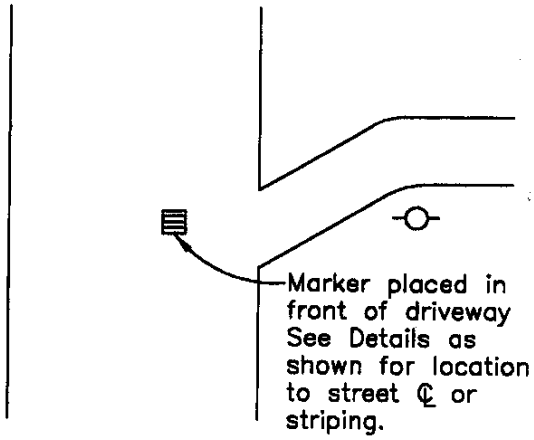

AT DRIVEWAY OR SOME DISTANCE FROM STREET

Fire Hydrant markers shall be Type I – Two-way blue reflective markers.

Denotes Fire Hydrant Marker

Denotes Fire Hydrant

Dimensions are in millimeters, except as noted

REVISIONS		CITY OF LONG BEACH, CALIFORNIA DEPARTMENT OF PUBLIC WORKS	STANDARD PLAN NO.
NO.	DATE		
1	12/02/97	**FIRE HYDRANT MARKERS**	METRIC **314**
2	12/23/02		
3		APPROVED BY: [signature] CITY ENGINEER R.E. No. 40599 DATE: 1/10/03 EX. DATE 03/31/03	SHEET 1 OF 1
4			

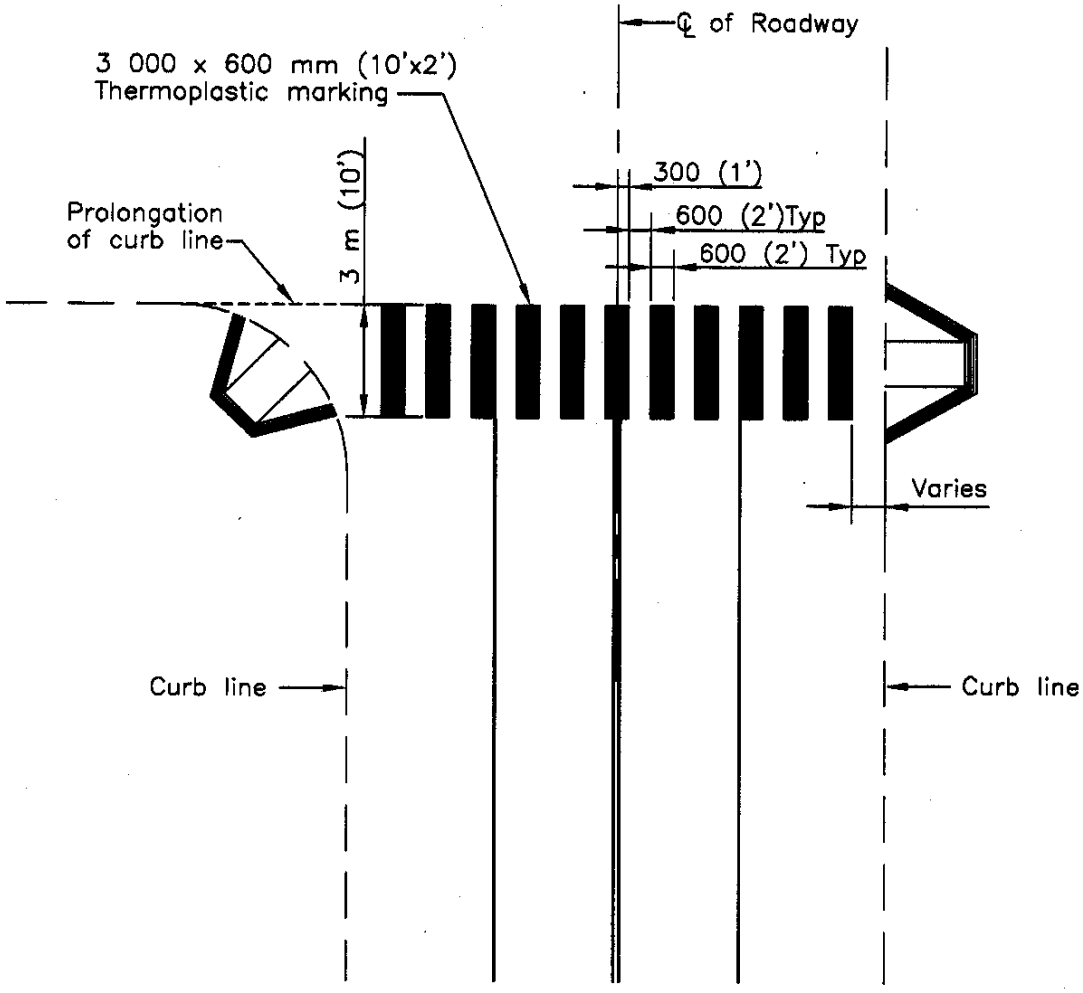

Dimensions are in millimeters, except as noted

REVISIONS		CITY OF LONG BEACH, CALIFORNIA DEPARTMENT OF PUBLIC WORKS	STANDARD PLAN NO.
NO.	DATE		
1	02/28/03	LONGITUDINAL CROSSWALK	METRIC 315
2			
3		APPROVED BY: CITY ENGINEER R.E. No. 40599 DATE: 4/16/03 EX. DATE 03/31/07	SHEET 1 OF 1
4			

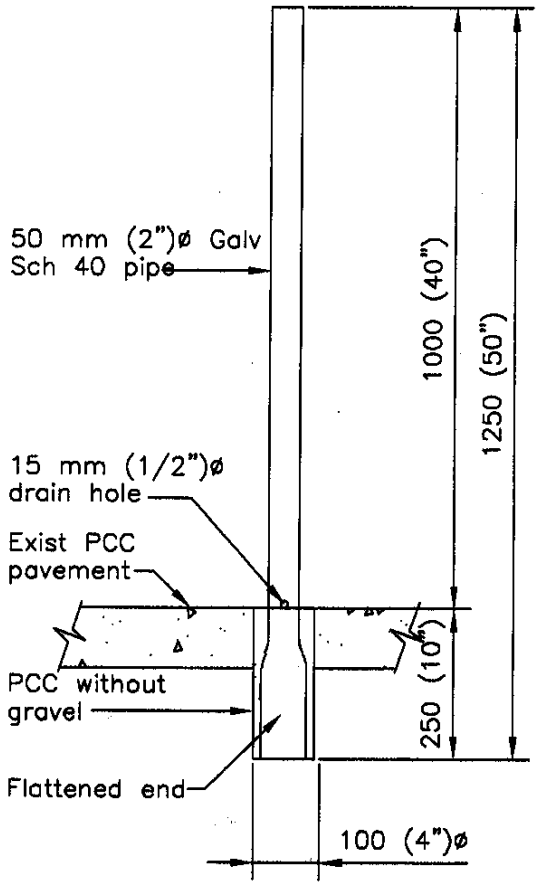

POST INSTALLATION IN PCC SURFACE

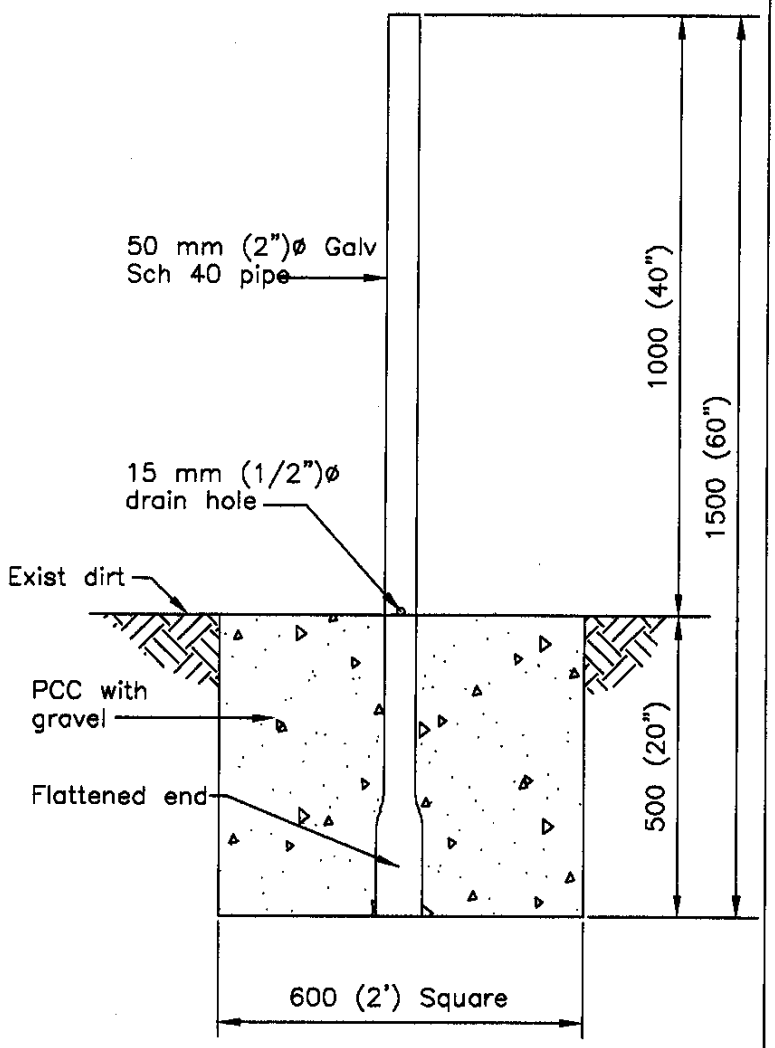

POST INSTALLATION IN DIRT SURFACE

Dimensions are in millimeters, except as noted

REVISIONS		CITY OF LONG BEACH, CALIFORNIA DEPARTMENT OF PUBLIC WORKS	STANDARD PLAN NO.
NO.	DATE		
1	02/28/03	PARKING METER POST INSTALLATION	METRIC 316
2			
3		APPROVED BY: _____ DATE: 4/16/03	SHEET
4		CITY ENGINEER R.E. No. 40599 EX. DATE 03/31/07	1 OF 2

Preparing the post:

1. Using 50 mm (2") galvanized domestic schedule 40 water pipe, rated ASTM A-53 or better, cut pipe to 1250 mm (50") lengths.
2. Measure 1000 mm (40") from end of pipe and drill 15 mm (1/2")ø hole through one wall of pipe.
3. Using a press, flatten one end of the pipe nearest the hole.
4. For posts to be installed in dirt, cut pipe length to 1500 mm (60") and follow the same procedure as above.

Preparing the hole; in cement:

600 mm (24") from curb face, using a 100 mm (4") core drill, cut hole through sidewalk to a depth of 250 mm (10").
Clean dirt and debris from hole.
Hole should be deep enough so that the drain hole in the pipe is at ground level.

Preparing the hole; in dirt:

600 mm (24") from curb face, dig out dirt, grass or sod about 600 mm (2') square and 500 to 550 mm (20" to 22") deep.
Walls of hole should be beveled out at bottom and curb undercut if possible.
Post should be centered 600 mm (24") from curb face.

Notes:

All parking meter posts shall be plumbed straight and level.
All parking meter post locations must be approved by the City Traffic Engineer prior to installation.

Dimensions are in millimeters, except as noted

REVISIONS		CITY OF LONG BEACH, CALIFORNIA DEPARTMENT OF PUBLIC WORKS	STANDARD PLAN NO.
NO.	DATE		
1	02/28/03	PARKING METER POST INSTALLATION	METRIC 316
2			
3		APPROVED BY: [signature] DATE: 4/16/03	SHEET
4		CITY ENGINEER R.E. No. 40599 EX. DATE 03/31/07	2 OF 2

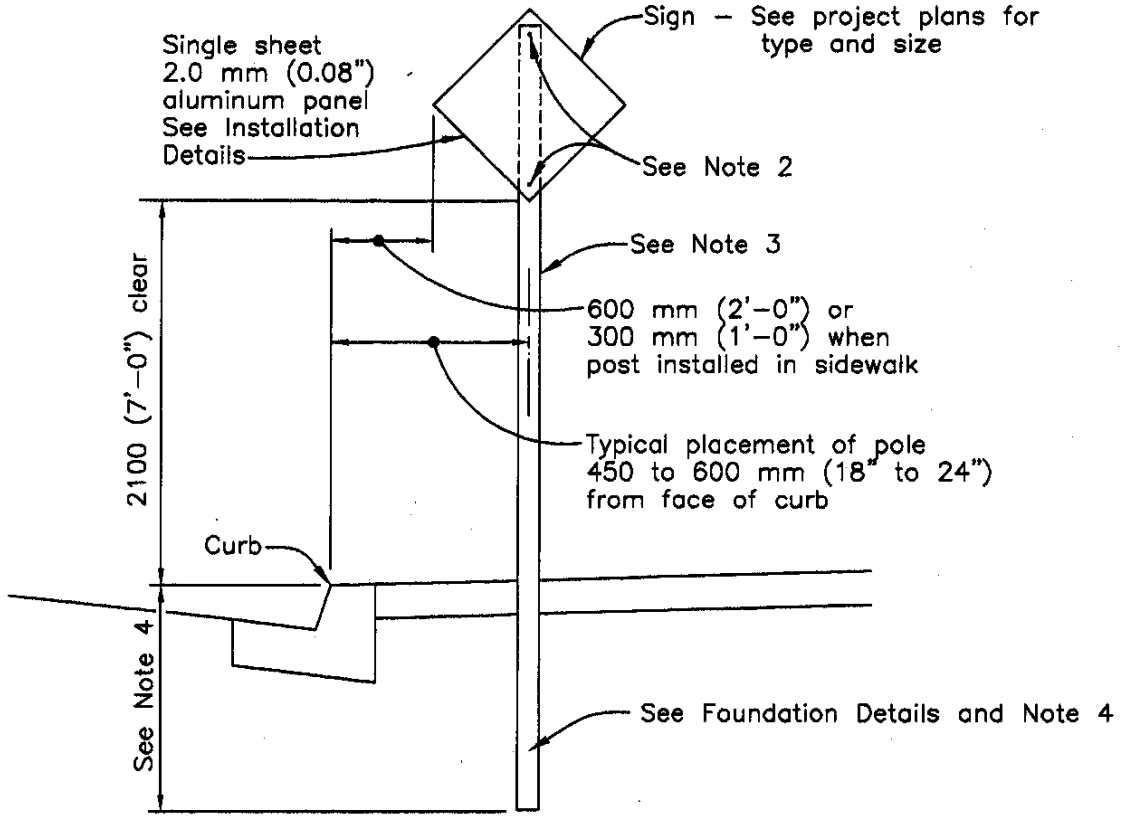

TYPICAL SIGN INSTALLATION

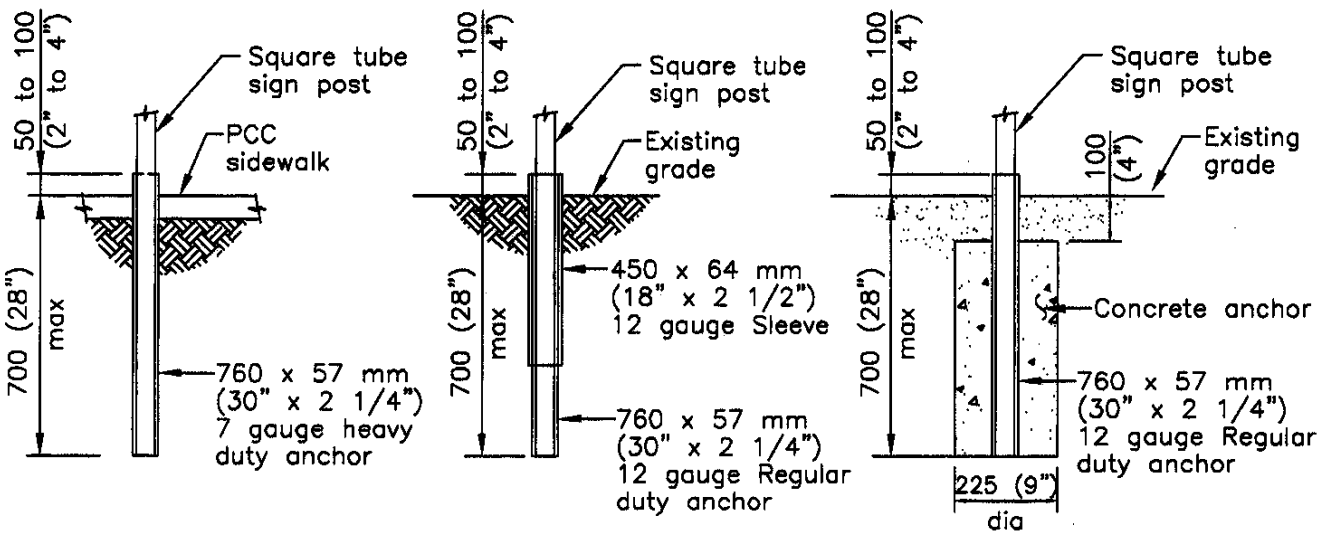

WITH SIDEWALK

WITHOUT SIDEWALK

AT SAND BEACHES

FOUNDATION DETAILS FOR SQUARE STEEL TUBING POST

Dimensions are in millimeters, except as noted

REVISIONS		CITY OF LONG BEACH, CALIFORNIA DEPARTMENT OF PUBLIC WORKS	STANDARD PLAN NO.
NO.	DATE		
1	04/05/96	TRAFFIC SIGN INSTALLATION	METRIC 317
2	11/28/01		
3	12/23/02	APPROVED BY: [signature] DATE: 4/14/03	SHEET
4	02/28/03	CITY ENGINEER R.E. No. 40599 EX. DATE 03/31/07	1 OF 3

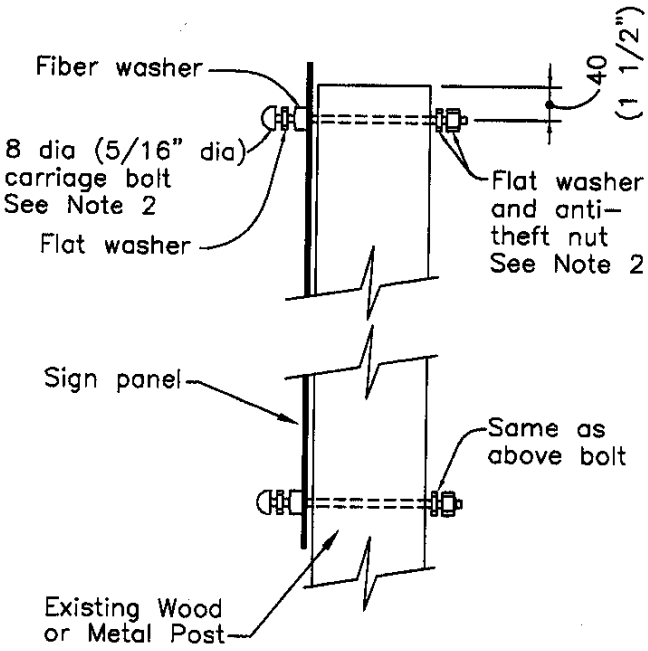

DETAIL A

SINGLE POST SIGN PANEL INSTALLATION AT EXISTING POST

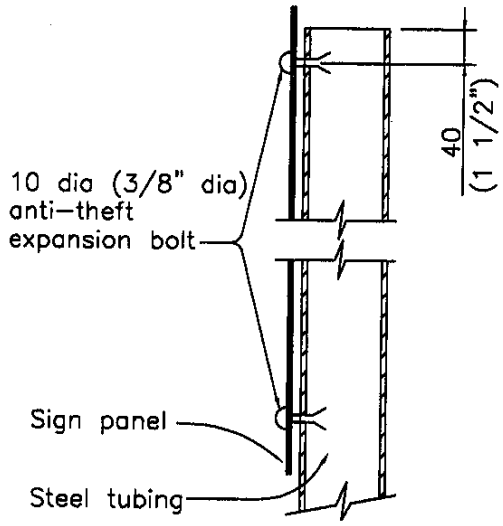

DETAIL B

SINGLE POST SIGN PANEL INSTALLATION AT NEW TUBE STEEL POST

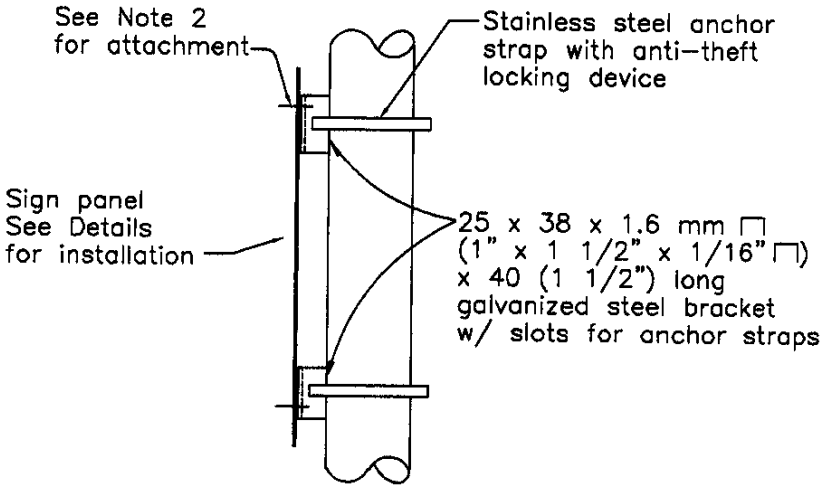

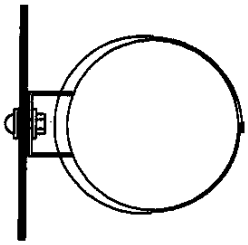

SIGN INSTALLATION ON STREET LIGHT OR TRAFFIC SIGNAL STANDARD

Dimensions are in millimeters, except as noted

REVISIONS		CITY OF LONG BEACH, CALIFORNIA DEPARTMENT OF PUBLIC WORKS	STANDARD PLAN NO.
NO.	DATE		
1	04/05/96	TRAFFIC SIGN INSTALLATION	METRIC 317
2	11/24/97		
3	12/23/02	APPROVED BY: CITY ENGINEER R.E. NO. 40599 DATE: 4/16/03 EX. DATE 03/31/07	SHEET 2 OF 3
4	02/28/03		

NOTES:

1. All signs shall be balanced installations unless otherwise shown on the project plans or as necessary to provide horizontal clearance from face of curb.

2. a. Sign panels shall be attached to wood post and steel brackets with galvanized 8 mm dia. (5/16" dia.) carriage bolts and anti-theft nuts per Detail A.
   b. Sign panels shall be attached to steel tubing with 10 mm dia. (3/8" dia.) approved anti-theft expansion bolts with cadmium plated washers on face of the sign per Detail B.

3. All new sign post shall be 51 x 51 mm (2"x2") square tubular posts and shall conform to the following specifications:

   Material: Steel posts furnished shall conform to the standard specifications for hot rolled carbon sheet steel, structural quality, ASTM designation A570, Grade 50.

   Finish: The square tubing shall be given triple coated protection by an in-line application of hot-dipped zinc (galvanized) per AASHTO M-120, followed by a chromate conversion coating and clear organic exterior coating. The inside surface shall be given corrosion protection by a double in-line application of a full zinc-based organic coating tested in accordance with ASTM B117 standards.

   Shape: The cross section of the post shall be square tubing formed of 14 gauge (.083 U.S.S. gauge) steel, carefully formed into size and corner induction welded in such a manner that neither weld nor flash shall interfere with telescoping properties.

   Die-Punched Knockouts: Knockout diameter shall be 11.1, ±0.4 mm (7/16", ±1/64") diameter on 25 mm (1") centers, on four opposite sides down the entire length of the post. Knockouts shall be on center line of each side in true alignment ond opposite each other. Only knockouts necessary for sign mounting shall be removed.

4. All traffic signs shall be mounted at an angle of 90 degrees to the curbline, except for parking signs with arrows that are used to indicate the limits of the restricted zone, which shall be installed at an angle not less than 30 degrees and not greater than 45 degrees to the curbline.

5. No sign post shall be erected within the curb return radii.

Dimensions are in millimeters, except as noted

REVISIONS		CITY OF LONG BEACH, CALIFORNIA DEPARTMENT OF PUBLIC WORKS	STANDARD PLAN NO.
NO.	DATE		
1	04/05/96	TRAFFIC SIGN INSTALLATION	METRIC 317
2	11/24/97		
3	12/23/02	APPROVED BY: [signature] DATE: 4/16/03	SHEET
4	02/28/03	CITY ENGINEER R.E. No. 40599 EX. DATE 03/31/07	3 OF 3

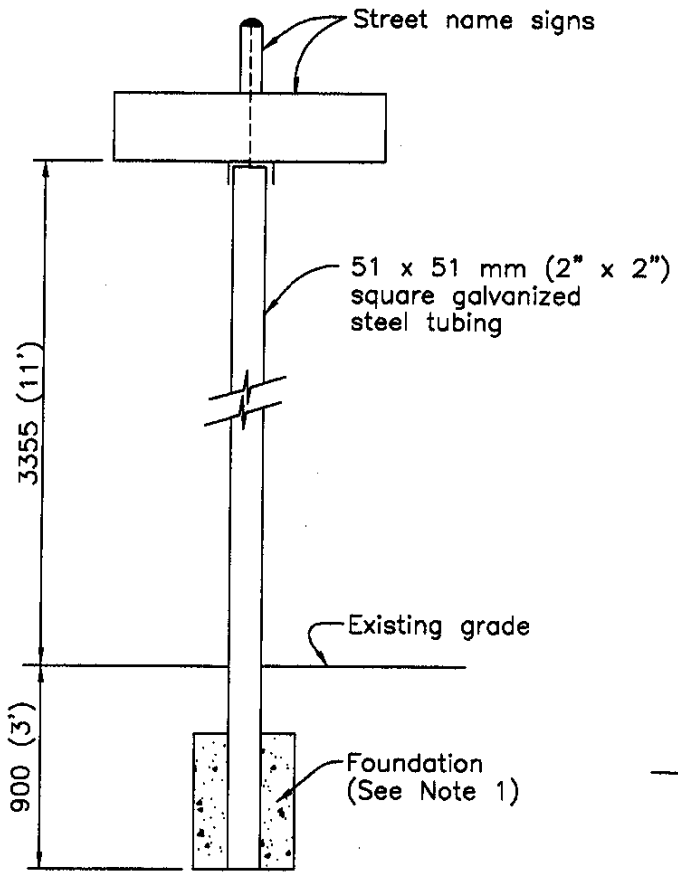

TYPICAL POST INSTALLATION

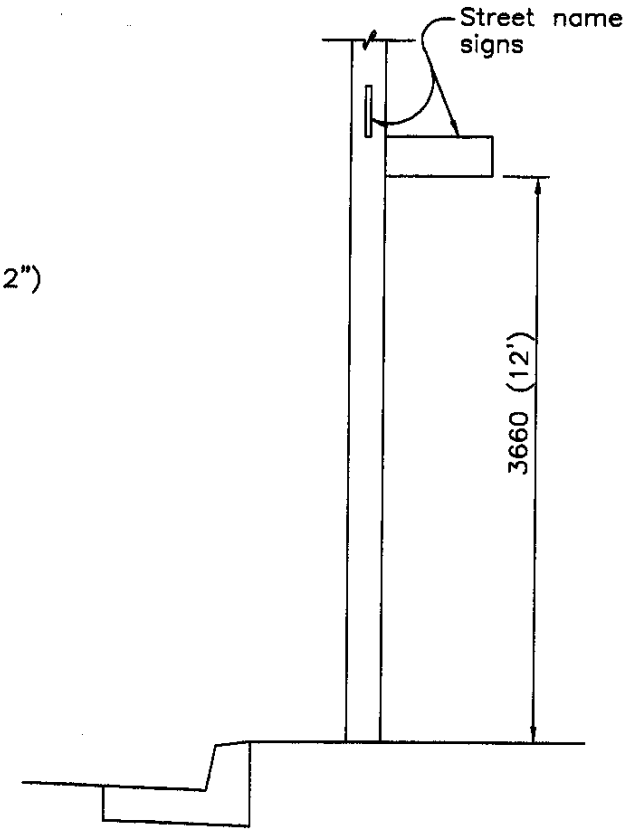

TYPICAL INSTALLATION ON STREET LIGHT
OR TRAFFIC SIGNAL STANDARD

NOTES:

1. For foundation details see Standard Plan LB-317
2. Location of signs shall be determined by Long Beach Bureau of Traffic and Transportation, telephone (562) 570-3264.
3. "Ave" signs shall be mounted on top of "St" signs.
4. All street name signs shall be mounted away from the curb.

Dimensions are in millimeters, except as noted.

REVISIONS		CITY OF LONG BEACH, CALIFORNIA DEPARTMENT OF PUBLIC WORKS	STANDARD PLAN NO.
NO.	DATE		
1	04/05/96	STREET NAME SIGN INSTALLATION	METRIC 318
2	06/14/01		
3	12/23/02	APPROVED BY: [signature] DATE: 4/16/03	SHEET
4	02/28/03	CITY ENGINEER R.E. No. 40599 EX. DATE 03/31/07	1 OF 2

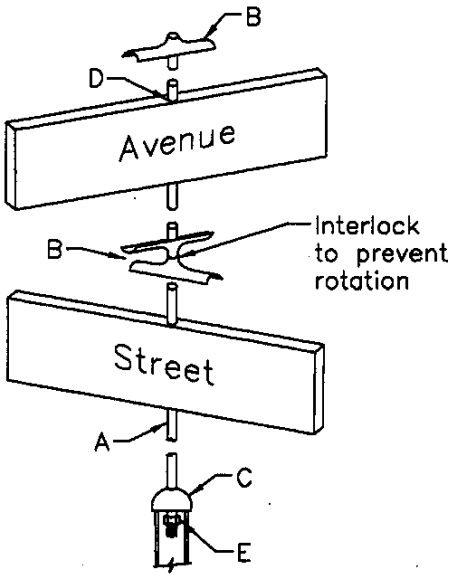

POST MOUNTING DETAIL

A Cadmium–plated carriage bolt 16 mm (5/8") dia, 305 or 535 mm (12" or 21") long.

B Ornamental top and center cross saddles anodized cast aluminum.

C Post cap, anodized cast aluminum, for 51 x 51 mm (2" x 2") square metal post, with three 10 mm (3/8") stainless steel set screws.

D Holes per Standard Plan LB–319

E 16 mm (5/8") galvanized split lock washer and hex nut

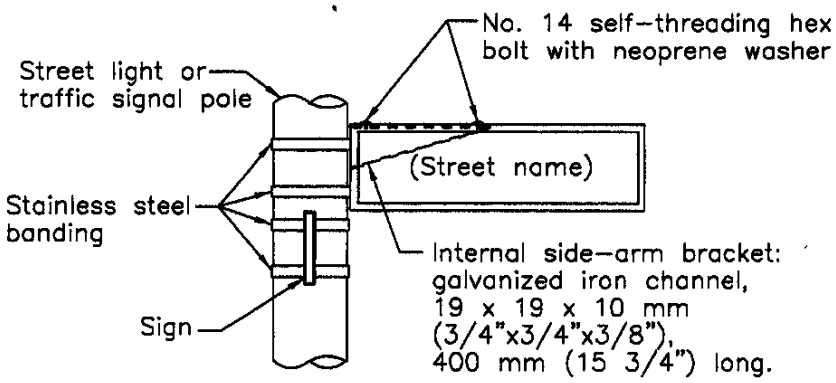

STREET LIGHT OR TRAFFIC SIGNAL MOUNTING DETAIL

Dimensions are in millimeters, except as noted

REVISIONS		CITY OF LONG BEACH, CALIFORNIA DEPARTMENT OF PUBLIC WORKS	STANDARD PLAN NO.
NO.	DATE		
1	04/05/96	STREET NAME SIGN INSTALLATION	METRIC 318
2	06/14/01		
3	12/23/02	APPROVED BY: [signature] DATE: 4/16/03	SHEET
4	02/28/03	CITY ENGINEER R.E. No. 40599 EX. DATE 03/31/07	2 OF 2

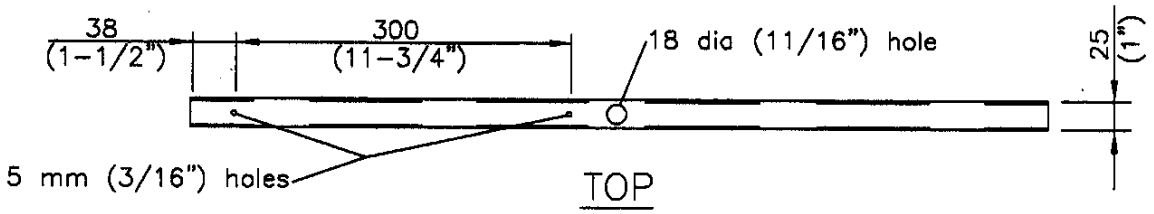

TOP

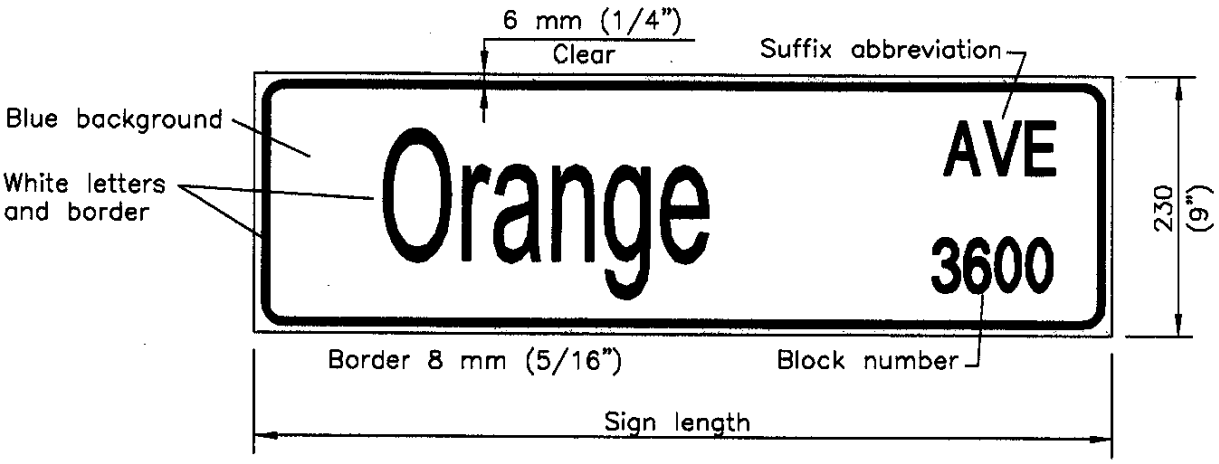

FACE

NOTES:

1. Sign Blank: 2.0 mm (0.080") aluminum 5052-H38 alloy. Before applying reflective sheeting, clean the blank and apply a chromate conversion coating to the entire surface.

2. Reflective sheeting: super engineer grade. Apply letters and border with a screen process.

3. Lettering: 2 NC Highway Gothic.

	Letter Height
Street Name	115 (4.50") UC 90 (3.50") LC
Suffix	50 (2") UC
Block No.	50 (2")

Count of Street Name Characters	Sign Length
5 or fewer	610 (24")
6 or 7	760 (30")
8	915 (36")
9	1065 (42")
10 or more	1220 (48")

Suffix Abbreviations	
Avenue	AV or AVE
Boulevard	BL or BLVD
Circle	CIR
Court	CT
Diagonal	DIAG
Drive	DR
Heights	HTS
Highway	HWY
Lane	LN
Park	PK
Parkway	PKY or PKWY
Place	PL
Plaza	PZ
Road	RD
Street	ST
Terrace	TER
Trail	TR
Turn	TN
Walk	WK
Way	WY or WAY

Dimensions are in millimeters, except as noted

REVISIONS		CITY OF LONG BEACH, CALIFORNIA DEPARTMENT OF PUBLIC WORKS	STANDARD PLAN NO.
NO.	DATE		
1	06/14/01	STANDARD STREET NAME SIGN	METRIC 319
2	12/23/02		
3	02/28/03	APPROVED BY: [signature] CITY ENGINEER R.E. No. 40599 DATE: 4/16/03 EX. DATE 03/31/07	SHEET 1 OF 1
4			

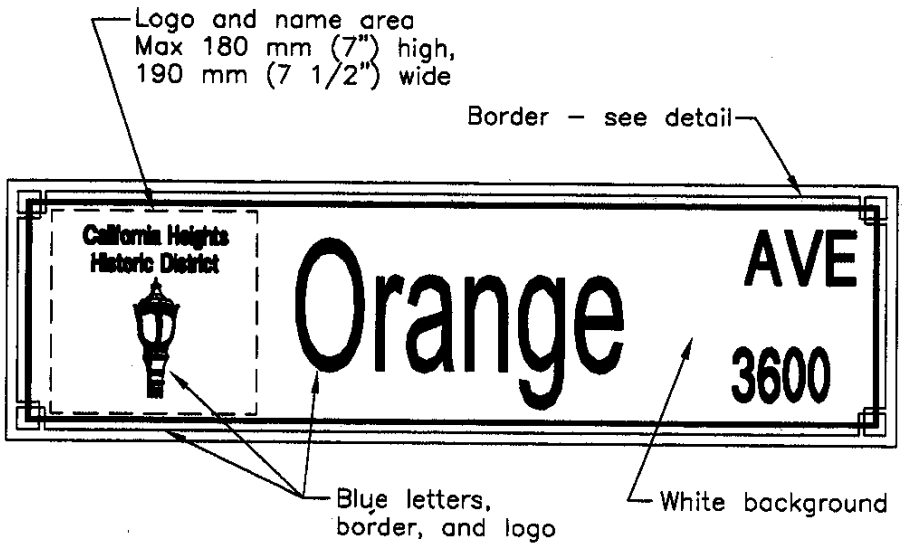

NOTES:

1. See Standard Plans LB–318 and LB–319 for other sign dimensions and details.
2. Reflective sheeting: Super engineer grade. Apply letters, border and logo with a screen process.
3. The historic district name shall be two lines, contained fully within the logo and name area.
4. The logo is optional. The color for the logo and district name shall match that of the street name.
5. Historic district customized signs shall be used only in official historic districts.

	Letter Height
Street Name	115 (4.50") UC 90 (3.50") LC
Suffix Block No.	50 (2") UC 50 (2")
H.D. Name	23 (0.90") UC 17 (0.65") LC

Count of Street Name Characters	Sign Length
5 or fewer	760 (30")
6 or 7	915 (36")
8	1065 (42")
9 or more	1225 (48")

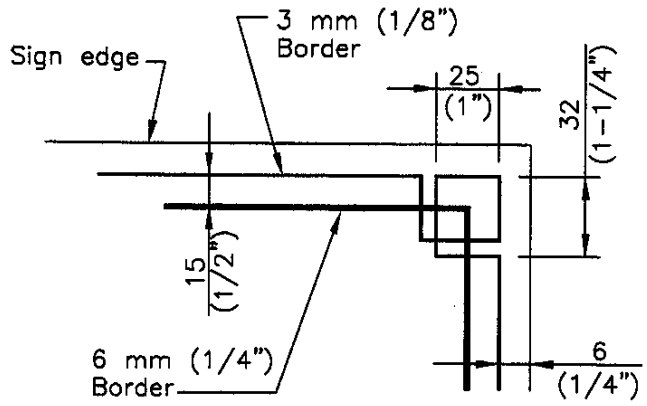

BORDER DETAIL

Dimensions are in millimeters, except as noted

REVISIONS		CITY OF LONG BEACH, CALIFORNIA DEPARTMENT OF PUBLIC WORKS	STANDARD PLAN NO.
NO.	DATE		
1	12/23/02	HISTORIC DISTRICT CUSTOMIZED STREET NAME SIGN	METRIC 320
2	02/28/03		
3		APPROVED BY: _____ DATE: 4/16/03	SHEET
4		CITY ENGINEER R.E. NO. 40599 EX. DATE 03/31/07	1 OF 1